8. **Previous Track / Previous FM Station (CH-):** When using the speaker in USB / TF Card & Bluetooth mode, press this button to go to the previous track. When using the speaker in FM mode, press this button to go to the previous stored FM station.
9. **Play / Pause & FM Scan:** Press this button to pause the signal from the USB flash drive TF Card or Bluetooth Inputs _ When using the speaker in FM mode, press this button to auto scan for all available stations _ Each station will be stored _ Press the CH + and CH- to choose a station. When the two speakers are switched to bluetooth mode, press the TWS function button on for 3-5 seconds to enter the TWS matching state, then the two speakers will be automatically paired and connected _ When the " dong " is heard, the matching is successful, and the LED screen has a display prompt.
10. **Next Track / Next FM Station (CH+):** When using the speaker in USB / TF Card & Bluetooth mode, press this button to go to the next track. When using the speaker in FM mode, press this button to go to the next stored FM station.
11. **Repeat Track:** Tap this button to Single tune repeat.
12. **Mode Selector:** Press this button to switch between USB, TF, FM and Bluetooth Inputs.
13. **Main volume knob:** use this knob to adjust the volume of USB / TF / BT / FM music.
14. **LED light power button:** press this button to turn on and off the front led and switch lights.
15. **Rec:** insert the microphone and insert a USB disk or TF card. Press and hold the REC button on the panel for 3-5 seconds to enter the recording. To stop recording, press and hold the REC button for 3-5 seconds. The recording file is saved in the USB flash drive or TF card. Recorded files can be deleted on your computer.
16. **Mute:** Mute button.
17. **Mic Prio:** When the microphone priority is activated speaking into the microphone will automatically lower any the other audio signal 20dB.
18. **EQ:** Adjust sound effects.

DECLARATION OF CONFORMITY

Radio equipment and telecommunications terminal equipment, Directive 2014/35/EU

Crystal Audio hereby declares that the product, PRT16 Party Speakers, is in conformity with provisions of the Directive 2014/53/EU. The complete text of the Declaration of conformity can be found on the following webpage: **www.crystalaudio.gr**

Warranty:

The product has 2-years warranty starting from the purchase date and is only valid with the proof of purchase (receipt or invoice). The warranty covers only the repair or replacement of the device and is effective only in Greece.

Damkalidis S.A. 44 Zefyrou str., P. Faliro, Greece

Designed in Europe by Crystal Audio-Assembled in China with the highest quality standards.

CRYSTALAUDIO

User Manual

Party Speakers

Portable Speaker

PRT16

Thank you for choosing **Crystal Audio Party Speakers.**
Please read this manual carefully and save it for a future reference.

Caution:

The lightning flash within an equilateral triangle is intended to alert you to the presence of uninsulated dangerous voltage within the product's enclosure that may be of sufficient magnitude to constitute an electric shock to a person or persons.

Important! This symbol alerts you to read and observe important warnings and instructions on the unit or in this manual.

1. Specifications:

Model: **PRT16**
Power supply: **DC15V/2A**
Max Power consumption: **60W**
Frequency response: **60Hz-20kHz**
Speaker diameter: **1x 1.5'' & 2x 8''**

2. Remote Control Function

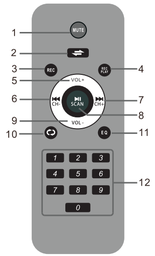

1. **MUTE:** Press this button to mute the sound
2. **Mode:** Toggle between source Bluetooth / USB / TF Card / FM / Aux
3. **Rec:** Press this button to record
4. **REC/Play:** Press this button to play the recording
5. **Vol+:** Press this button to increase the volume
6. **Previous Track/CH-:** Select previous track in Bluetooth / USB / TF Card Modes or select previous preset frequency in FM mode
7. **Next Track/CH+:** Select next track in Bluetooth / USB / TF Card Modes or select next preset frequency in FM mode
8. **Play/Pause/Scan:** Press this button to play or pause the track in Bluetooth /USB/TF mode. In FM mode, short press to scan for available frequencies
9. **Volume -:** Press this button to decrease the volume
10. **Repeat:** Press to replay back selected song, press twice to repeat all the songs
11. **EQ:** Choose different EQ mode
12. **0-9:** To select your track song from your USB or TF card device

3. Panel Function

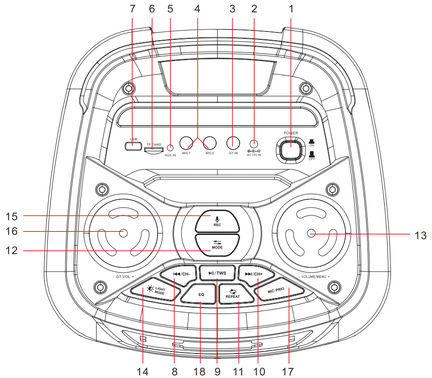

1. **Power Switch:** Press this switch turn on and off the speaker. Before powering on the speaker make sure the volume levels are turned down to prevent damage to the amplifier or speakers.
2. **DC IN:** Charging Port 15V.
3. **GT IN:** Guitar input.
4. **Mic1/Mic2:** Insert wired microphone to panel and adjust MIC VOL and Echo to the desirable level.
5. **AUX Input:** Connect your smartphone, mp3 player, laptop or other audio device to this input.
6. **TF Input:** Insert your TF Card into this slot. The unit will only read .mp3, .wav, .wma files from the TFCard flash drive cannot exceed 32GB.
7. **USB Input:** Insert your USB Flash Memory into this slot. The unit will only read _mp3, _wav, _wma files from the USB flash cannot exceed 32GB.
Do not attempt to connect a computer to the USB input.